PowerKit Engine

6M33 Series

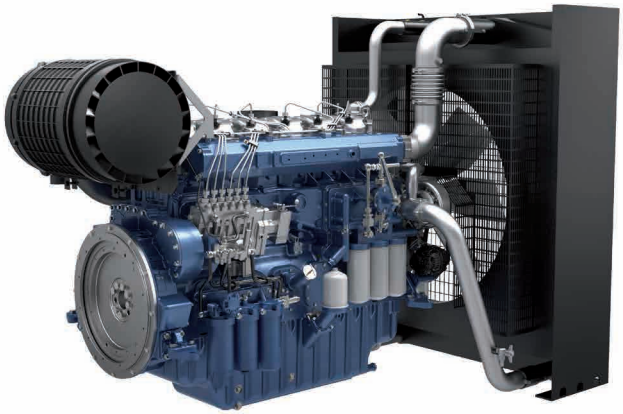

General Specifications

Bore x Stroke	150 x 185 mm
Displacement	19.6 L
N° of Cylinders	6
Cylinders Arrangement	In line
Fuel System	Mechanical Pump / Common Rail
Governor (Gov.)	Electronic / ECU
Aspiration (Asp.)	T/A-A

Diesel Engine	Speed	Gross Engine Output		Typical Generator Output				Asp.	Gov.
		Prime Power PRP	Standby Power ESP	Prime Power PRP		Standby Power ESP			
	Rpm	kWm	kWm	kWe	kVA	kWe	kVA		
6M33G660/5	1500	536	587	480	600	528	660	T/A-A	Elec
6M33G715/5	1500	575	633	520	650	572	715	T/A-A	Elec
6M33G750/5^	1500	610	670	544	680	600	750	T/A-A	Elec
6M33G825/5^	1500	659	725	600	750	660	825	T/A-A	ECU
6M33G575/6	1800	575	633	520	650	575	719	T/A-A	Elec
6M33G600/6	1800	610	670	550	688	600	750	T/A-A	Elec
6M33G633/6^	1800	645	710	575	719	633	791	T/A-A	Elec
6M33G660/6^	1800	670	740	600	750	660	825	T/A-A	ECU

Aspiration : T/A-A = Turbocharged & Air-to-Air Aftercooled
^ These engines are designed for emergency standby power (ESP) applications only. The indicated PRP Power is for reference only.

Standard Equipment

Engine and block
- Cast iron cylinder block with inspection door per cylinder
- Cast iron cylinder liners, wet type and replaceable valves guides and seats
- Separate cast iron cylinder heads with 4 valves
- Hardened steel forged crankshaft with induction hardened journals, crankpins and radius
- Lube oil cooled light alloy pistons with high performance piston rings

Cooling system
- Radiator and hoses supplied separately
- Thermostatically-controlled system with belt driven coolant pump and pusher fan

Lubrication system
- Full flow screw able oil filters
- Lube oil purifier with replaceable cartridge (not included for ECU engines)
- Water cooled lube oil cooler

Fuel system
- In line fuel injection pump with flanged electronic governor, for engines with electronic governor
- High pressure Common Rail injection system, for engines with ECU
- Duplex fine filter and water separation filter assembly with transparent cup for better efficiency
- Electric fuel priming pump integrated in the filters support

Air intake and exhaust system
- Top mounted turbocharger optimized for gen-set application
- Special rear mounted air filter with restriction indicator
- Exhaust manifold and turbocharger shield for heat isolating

Electrical system
- 24 Vdc electric starter motor and battery charging alternator
- LOP + HWT sensors

Flywheel and housing
- SAE 1 flywheel housing and 14" flywheel

Ratings definitions

Emergency Standby Power (ESP)

Emergency Standby Power is the maximum power available for a varying load for the duration of a main power network failure. The average load factor over 24 hours of operation should not exceed 70% of the engine's ESP power rating.
Typical operational hours of the engine is 200 hours per year, with a maximum usage of 500 hours per year. This includes an annual maximum of 25 hours per year at the ESP power rating. No overload capability is allowed. The engine is not to be used for sustained utility paralleling applications.

Unlimited Prime Rated Power (PRP)

Prime Power is the maximum power available for unlimited hours of usage in a variable load application. The average load factor should not exceed 70% of the engine's PRP power rating during any 24 hour period. An overload capability of 10% is available, however, this is limited to 1 hour within every 12 hour period.

Continuous Power (COP)

Continuous Power is the maximum power available for an unlimited period of use at a constant load factor. No overload capability is allowed.

1) All ratings are based on operating conditions under ISO 8528-1, ISO 3046, DIN6271. Performance tolerance of ±5%.
2) Test conditions : 100 kPa, 25°C air inlet temperature, relative humidity of 30%, with fuel density 0.84 kg/L. Derating may be required for conditions outside these; please contact the factory for details.
3) Power output curves are based on the engine operating with fuel system, water pump and lubricating oil pump; not included are battery charging alternator, fan and optional equipment.

Dimensions and dry weight (mm / kg)

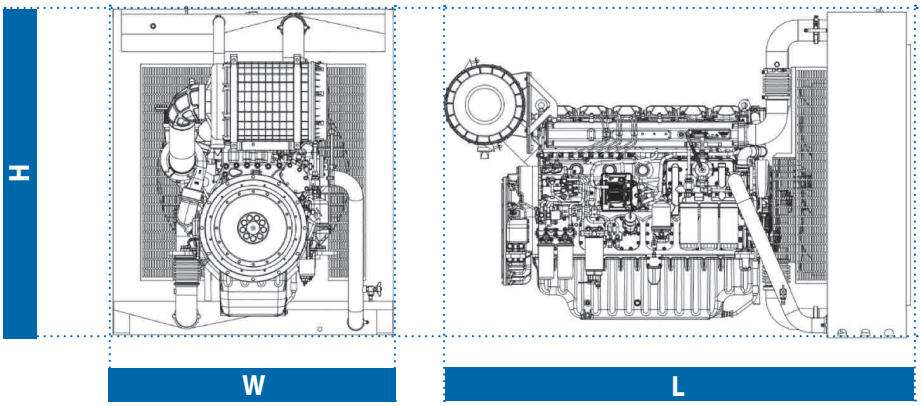

Diesel Engine	Speed	Dimensions and dry weights including radiator			
		L	W	H	Weight
	Rpm	mm	mm	mm	Kg.
6M33G660/5	1500	2798	1600	1900	2610
6M33G715/5	1500	2798	1600	1900	2610
6M33G750/5	1500	2798	1680	1954	2620
6M33G825/5	1500	2798	1680	1954	2620
6M33G575/6	1800	2798	1600	1900	2610
6M33G600/6	1800	2798	1600	1900	2610
6M33G633/6	1800	2798	1680	1954	2620
6M33G660/6	1800	2798	1680	1954	2620

M.D.113.EN. 04.20 Moteurs Baudouin reserve the right to modify these specifications, without notice. Document not contractual.

Société Internationale des Moteurs Baudouin
Technoparc du Brégadan - 13260 Cassis - France - Tel. +33 488 688 500 - **Baudouin.com**